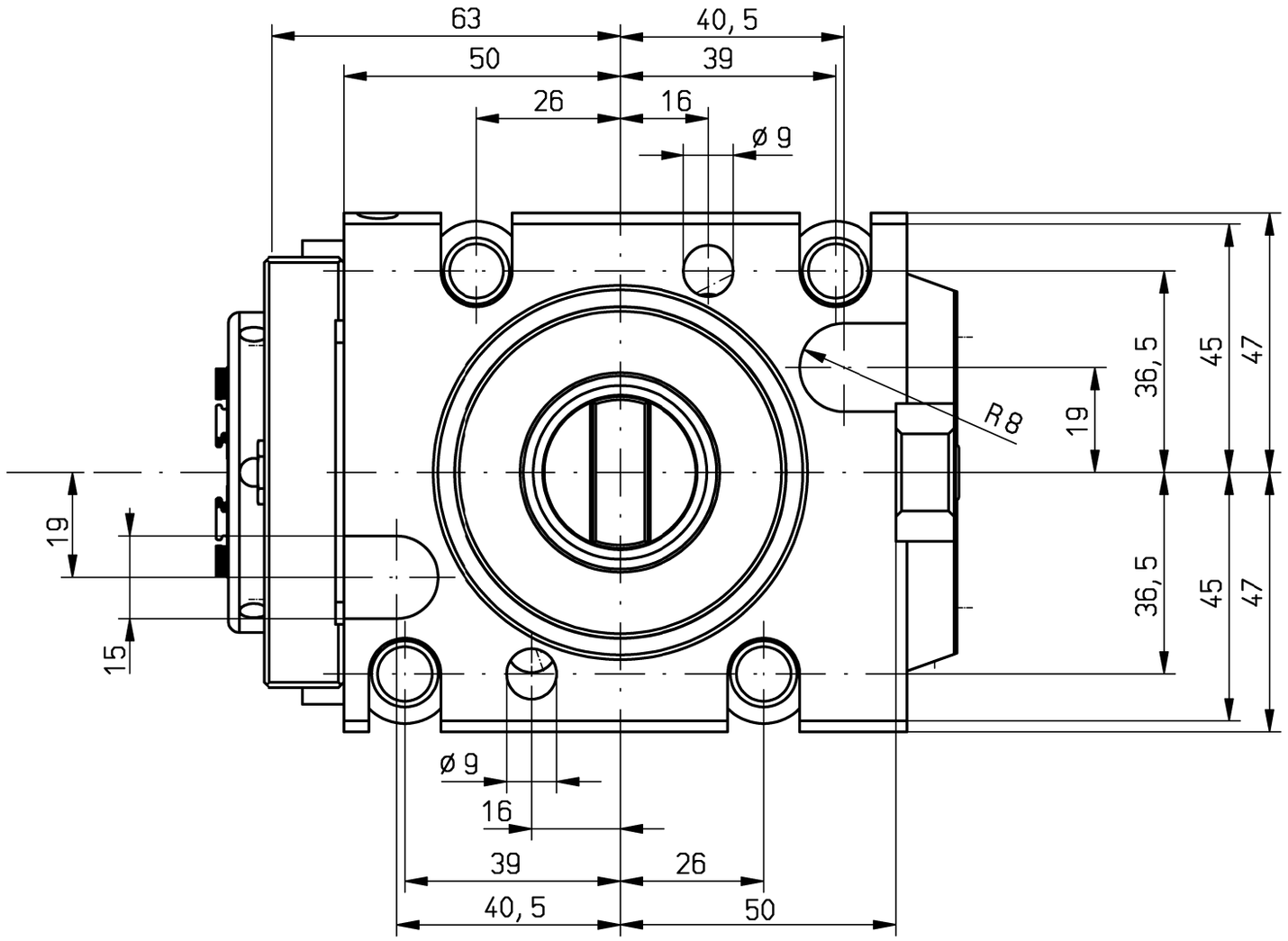

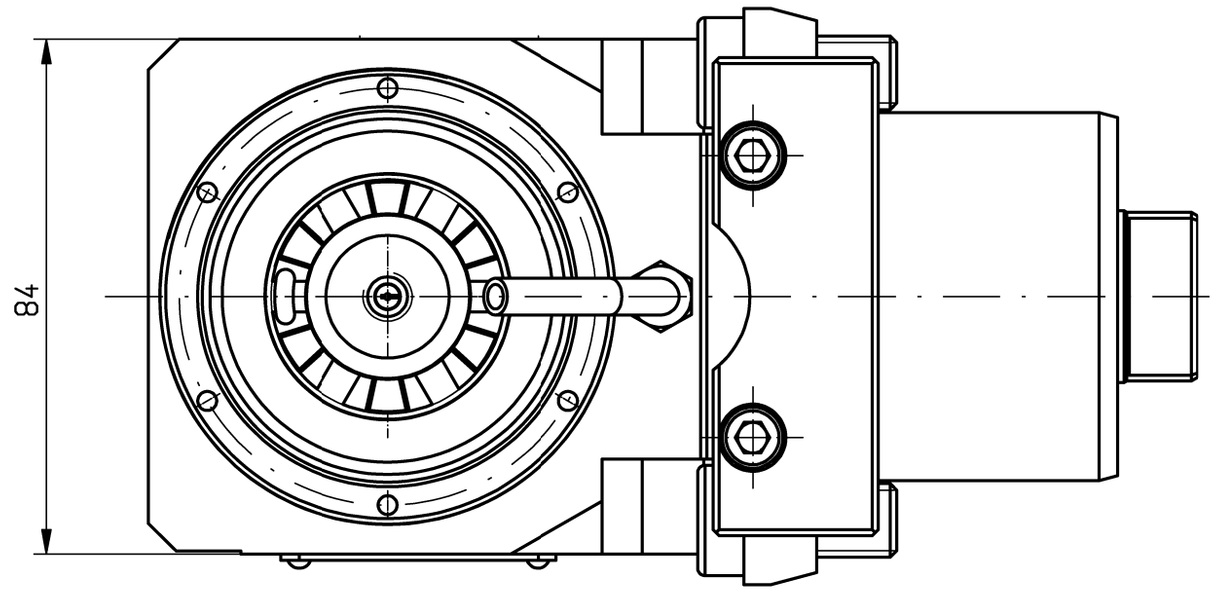

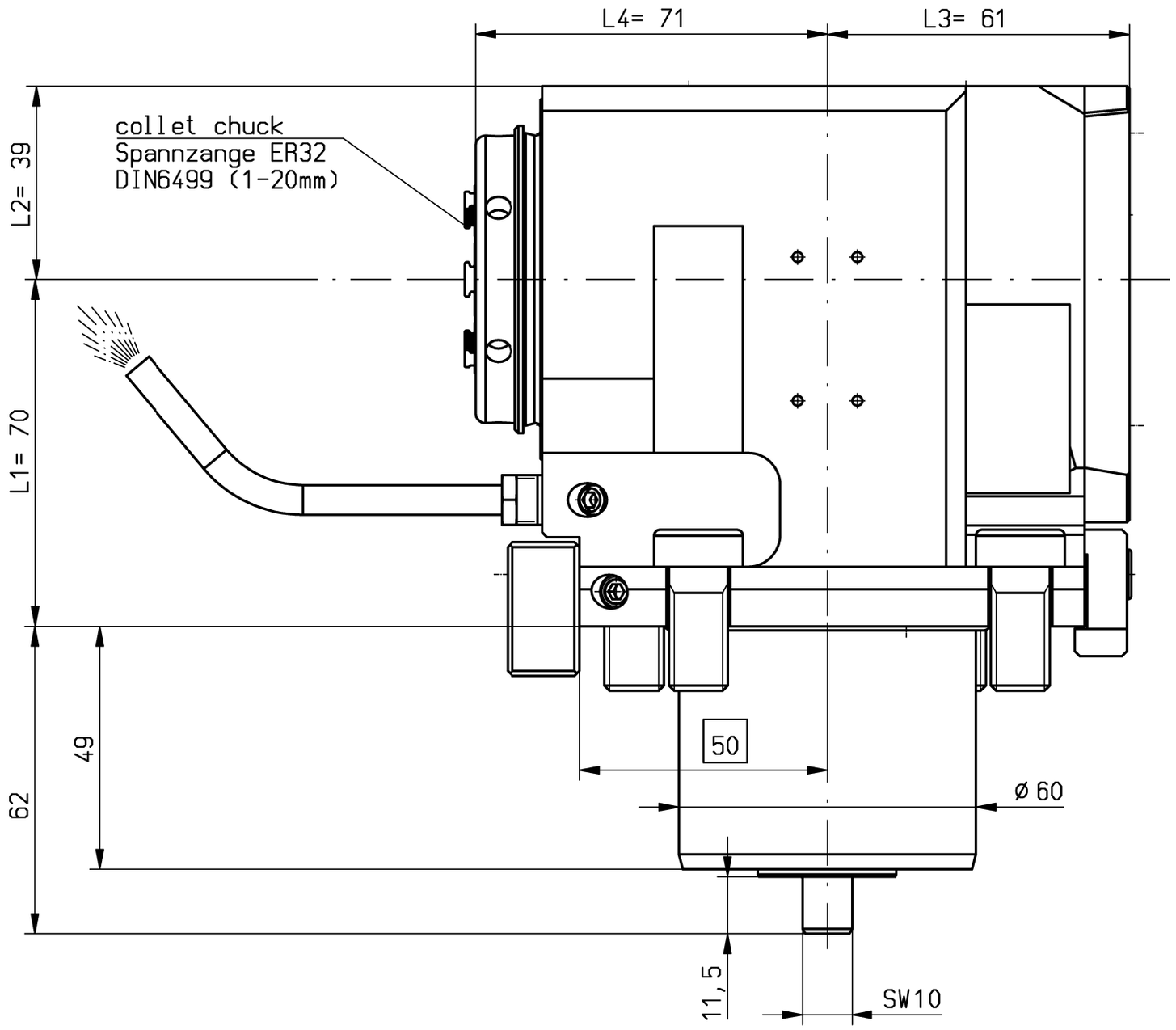

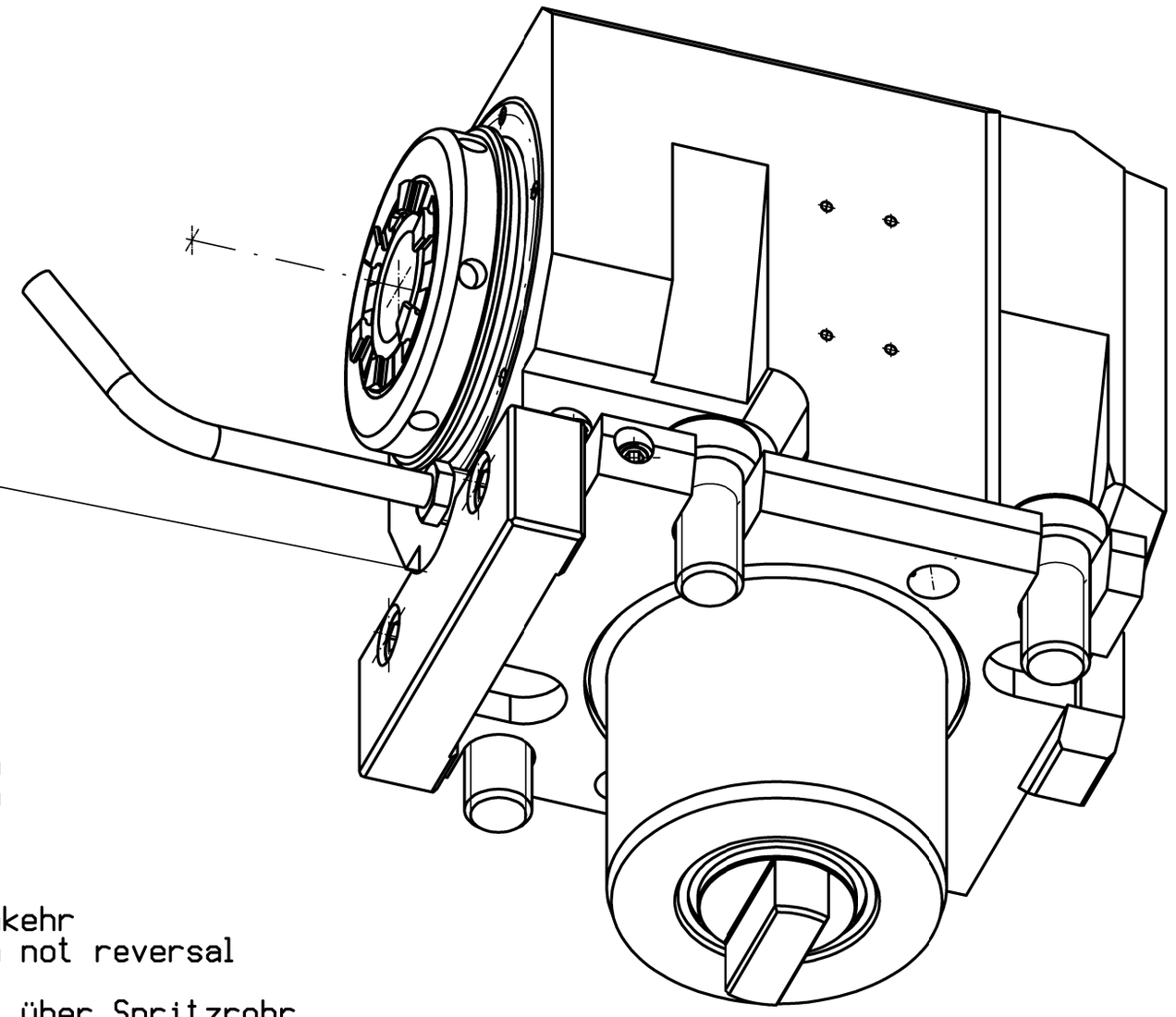

n1(max) = 6500 U/min
n2(max) = 6500 U/min
M (max) = 50 Nm
i(n1/n2) = 1 : 1

keine Drehrichtungsumkehr
direction of rotation not reversal

Kühlmittelzufuhr e.K. über Spritzrohr
external coolant supply through pipes

Gewicht ca. 8kg
weight around 8kg

A187618	ID-Nr.			Allg.Tol. ISO 2768-mK	ZWN-BL	Maßstab 1:1	
				15.04.2024		Werkstoff: Maßblatt	
	manuelle Änderung				Datum / Name	mimatic® Tool Systems	
				Bearb.	15.04.2024 Kropp	mimatic GmbH 87488 Betzigau – Westendstraße 3	
				Gepr.	15.04.2024 Kropp	Tel.: 0831/57444-0 Fax.: -90	
				F/M/Q			
				CAD: C:00183055.SZA			
				Zeichnungs-Nr.: 00063230		AGW-OK-C-60-ER32-E L1=70 S=49 i=1:1 LB2000	Blatt Bl.
Zust.	Änderung	Datum	Name	Urspr. 00035518		Ers. f.:	Ers. d.: Plotserver

It is strictly prohibited to copy, reproduce or develop these drawings to third persons without having our written permission. A copyright violation involves a claim for damages and is indictable if it is premediative done. - Only for Information. Will not be replaced if changed!